Endress+Hauser
People for Process Automation
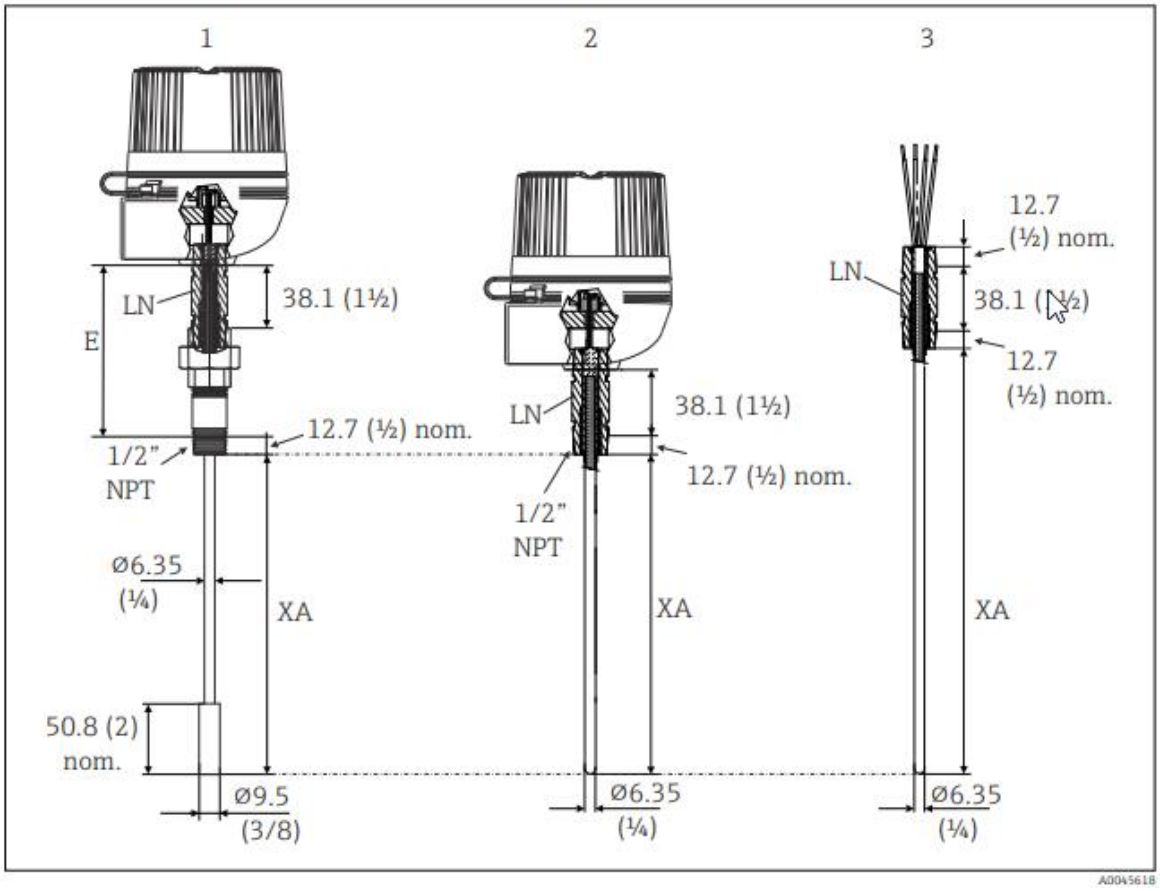
T15