J22 Spare parts and kits

Endress+Hauser

People for Process Automation

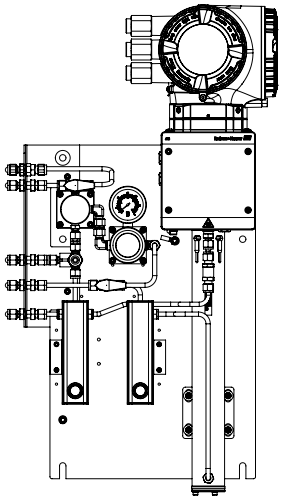

Panel configuration

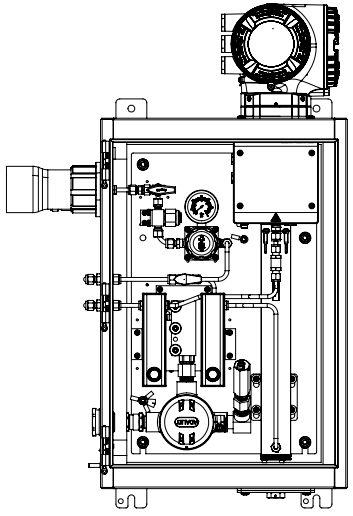

ATEX enclosure with filter (no purge)

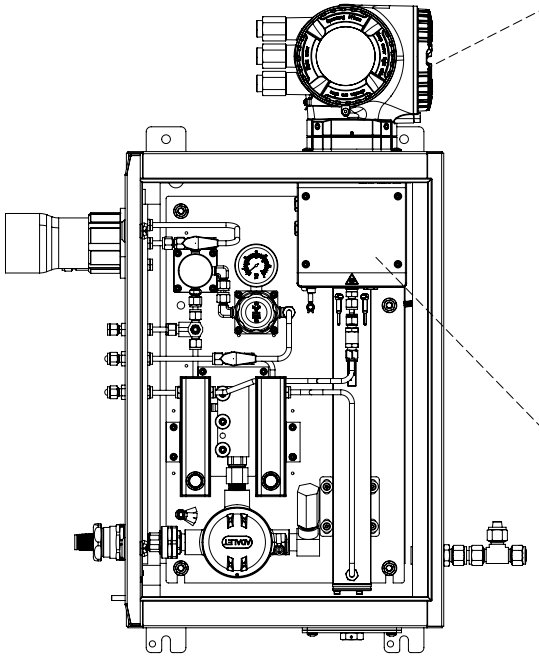

CSA enclosure with membrane and purge

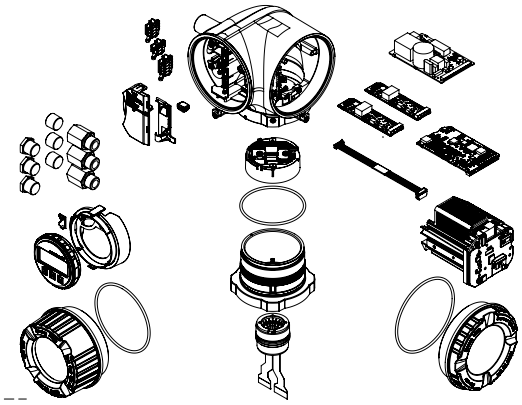

Controller

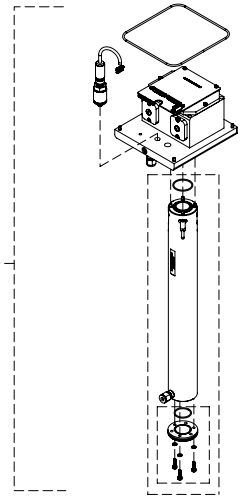

Optical head and cell

J22 Enclosed SCS with purge | Spare parts and kits

Endress+Hauser
People for Process Automation

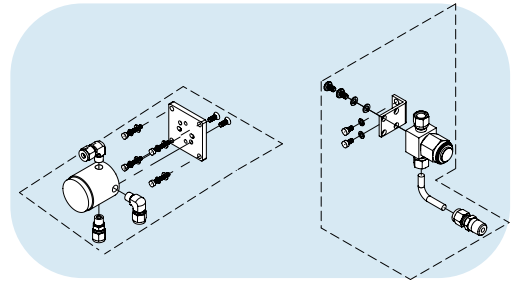

Filtration with membrane

Filtration with filter

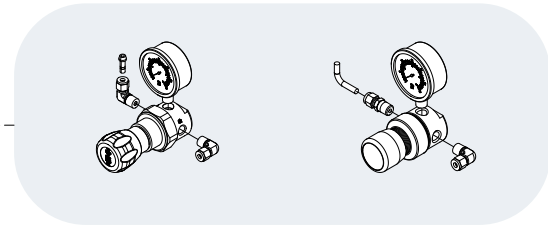

Pressure regulator and gauge

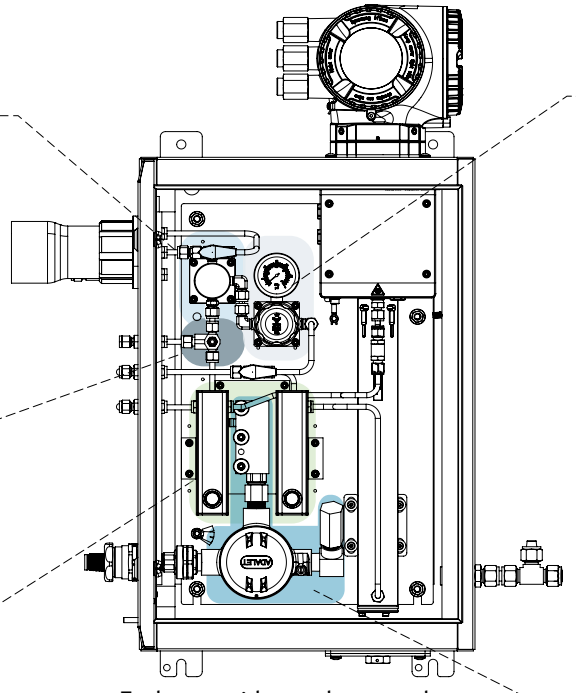

Enclosure with membrane and purge



Relief valve

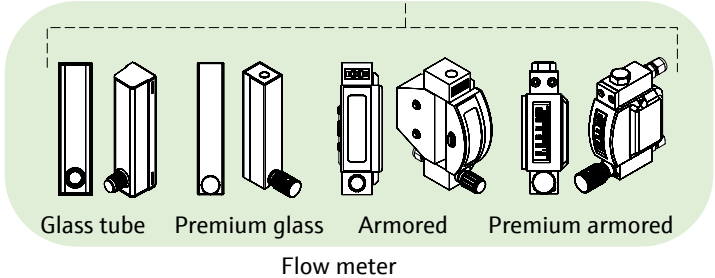

Glass tube Premium glass Armored Premium armored

Flow meter

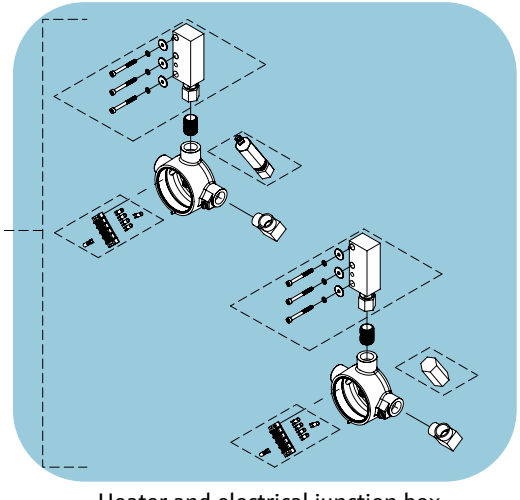

Heater and electrical junction box

J22 Controller spare parts and kits

Endress+Hauser
People for Process Automation

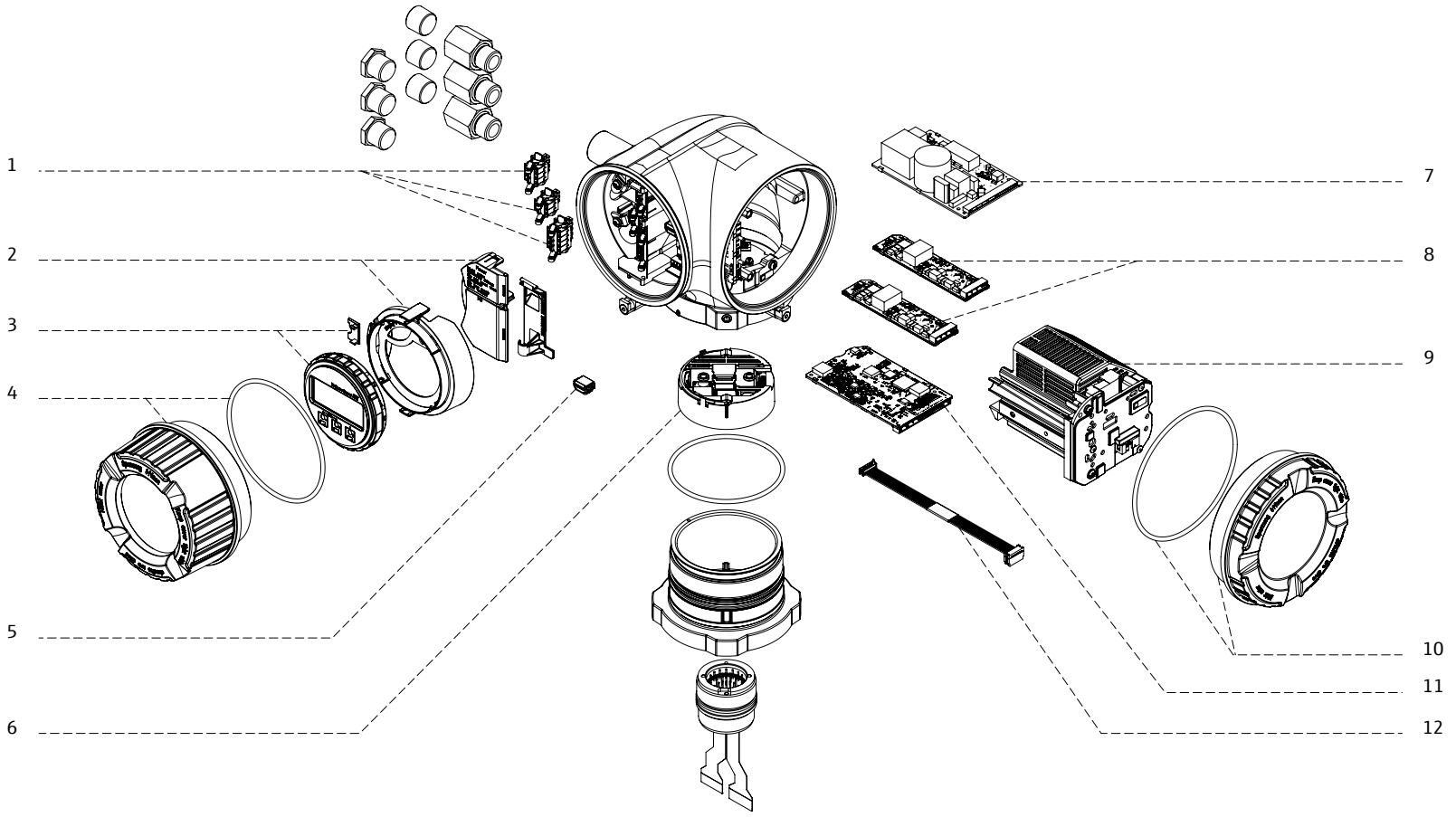

J22 Optical head enclosure spare part

Endress+Hauser
People for Process Automation

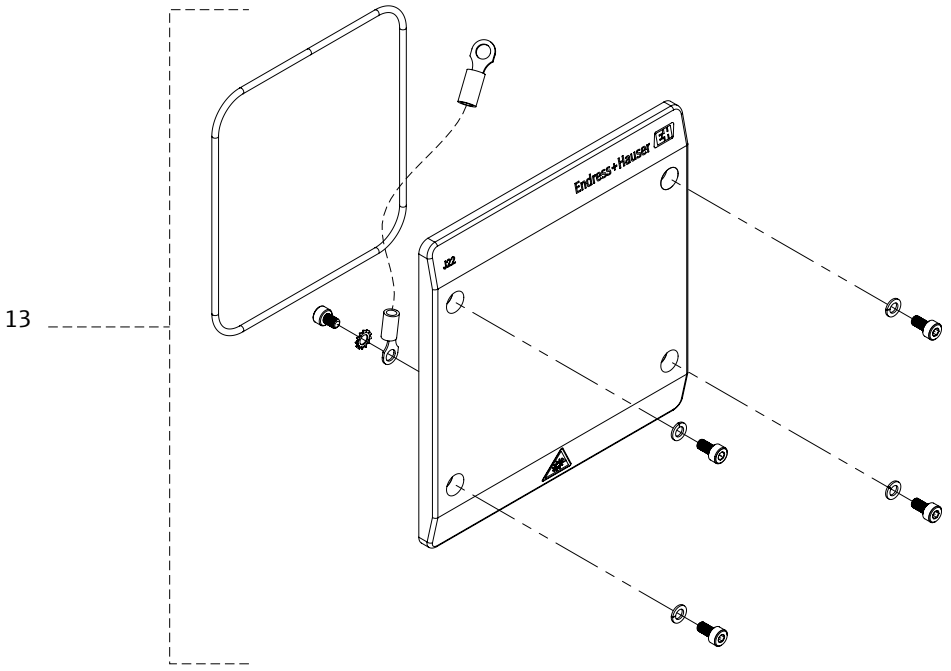

J22 Optical head and cell spare parts and kits

Endress+Hauser
People for Process Automation

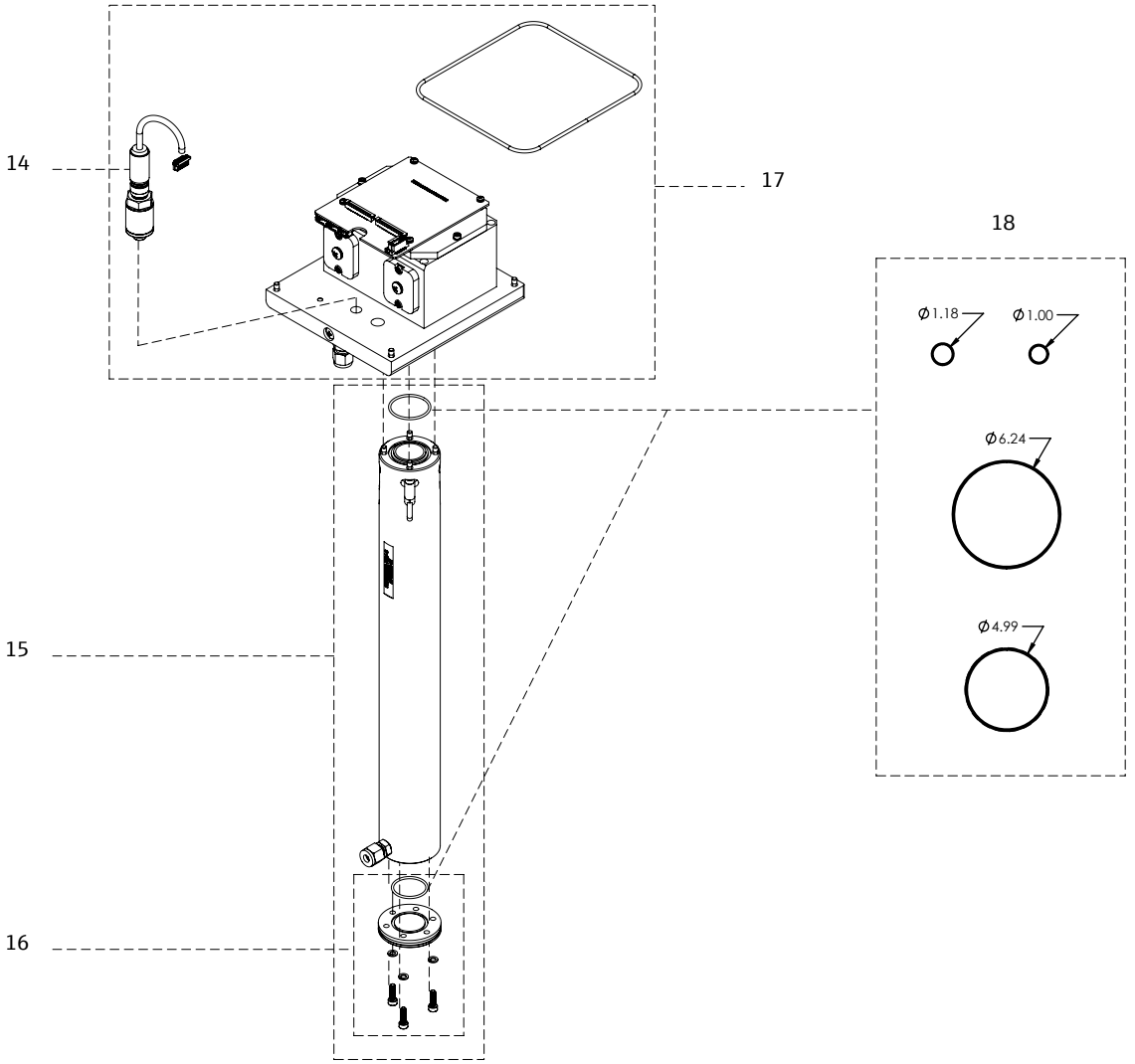

Endress+Hauser
People for Process Automation

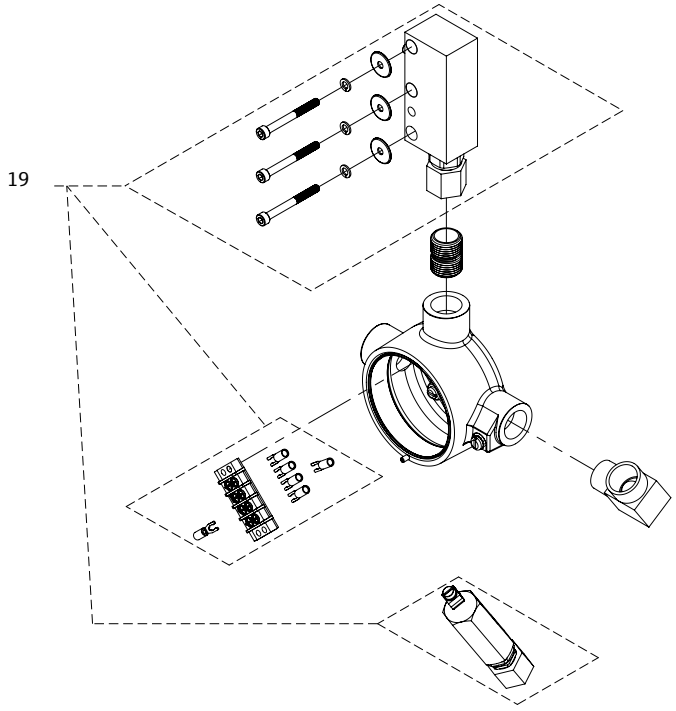

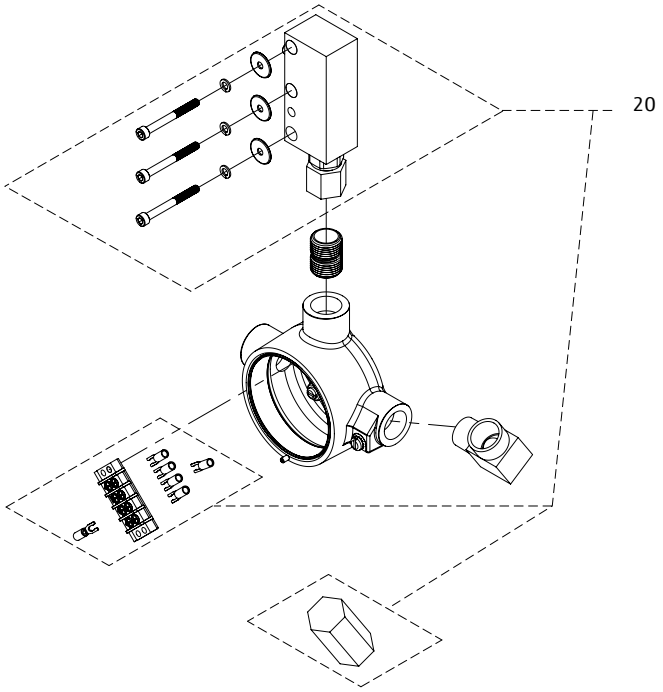

J22 Filtration and pressure regulator spare parts and kits

Endress+Hauser
People for Process Automation

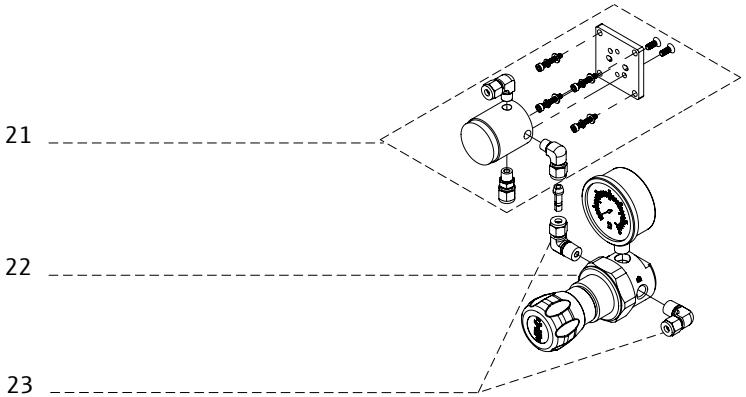

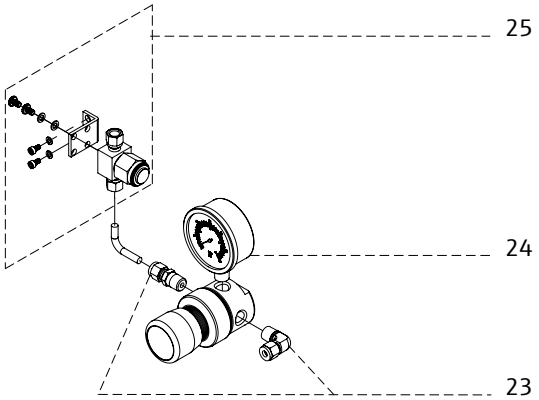

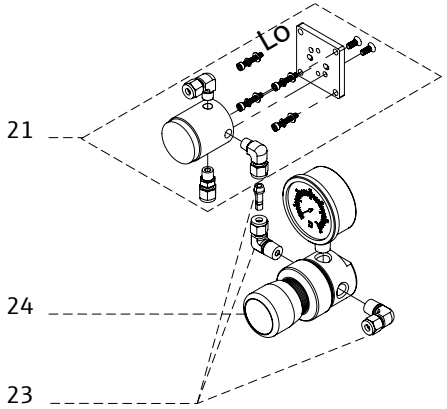

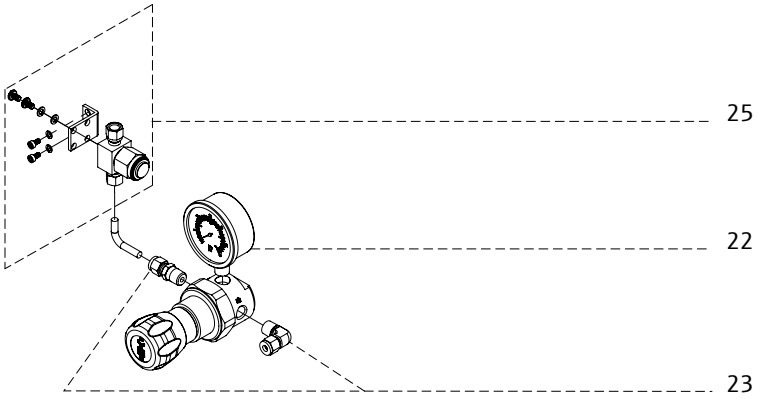

Endress+Hauser
People for Process Automation

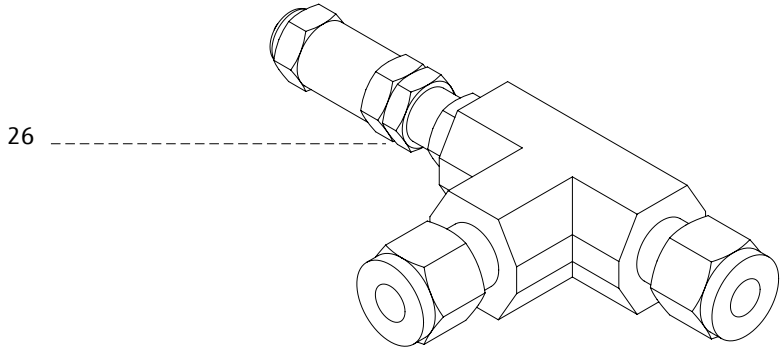

J22 Glass flow meter spare part

Endress+Hauser
People for Process Automation

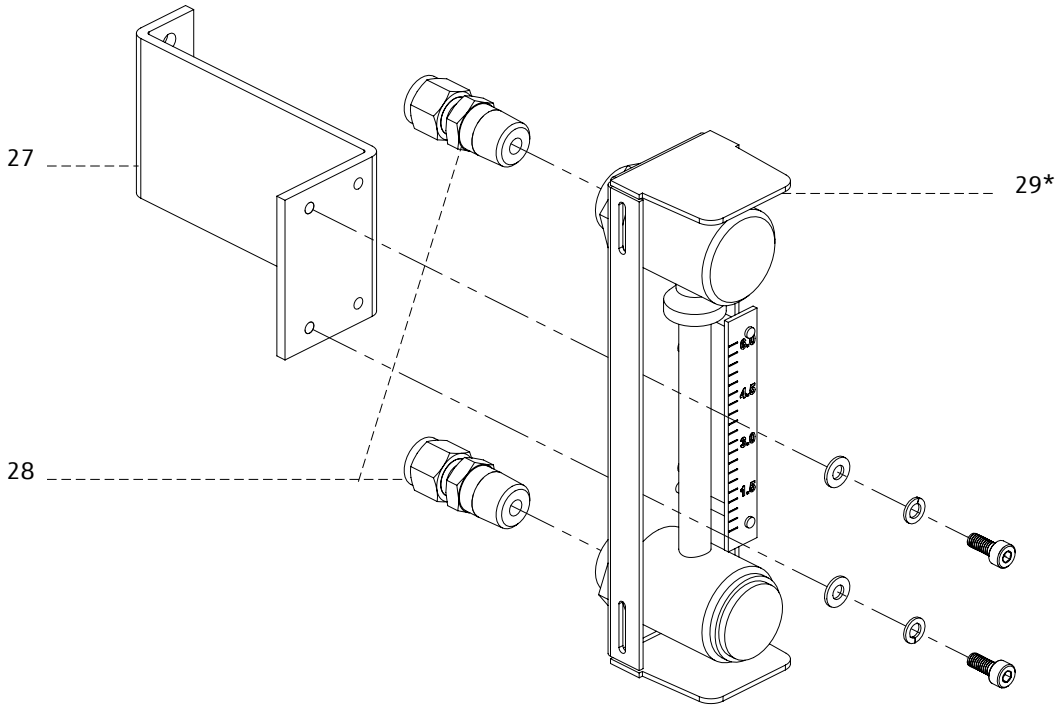

* Polycarbonate cover missing from view.

J22 Premium glass flow meter spare part

Endress+Hauser
People for Process Automation

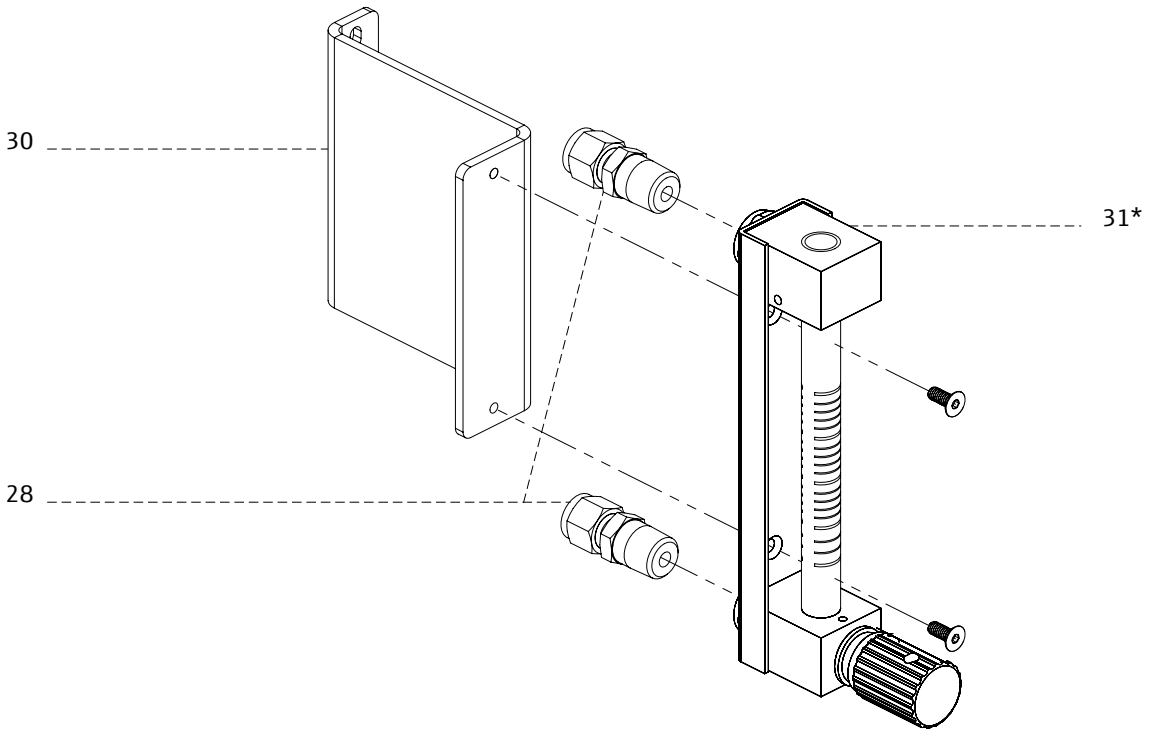

* Polycarbonate cover missing from view.

Endress+Hauser
People for Process Automation

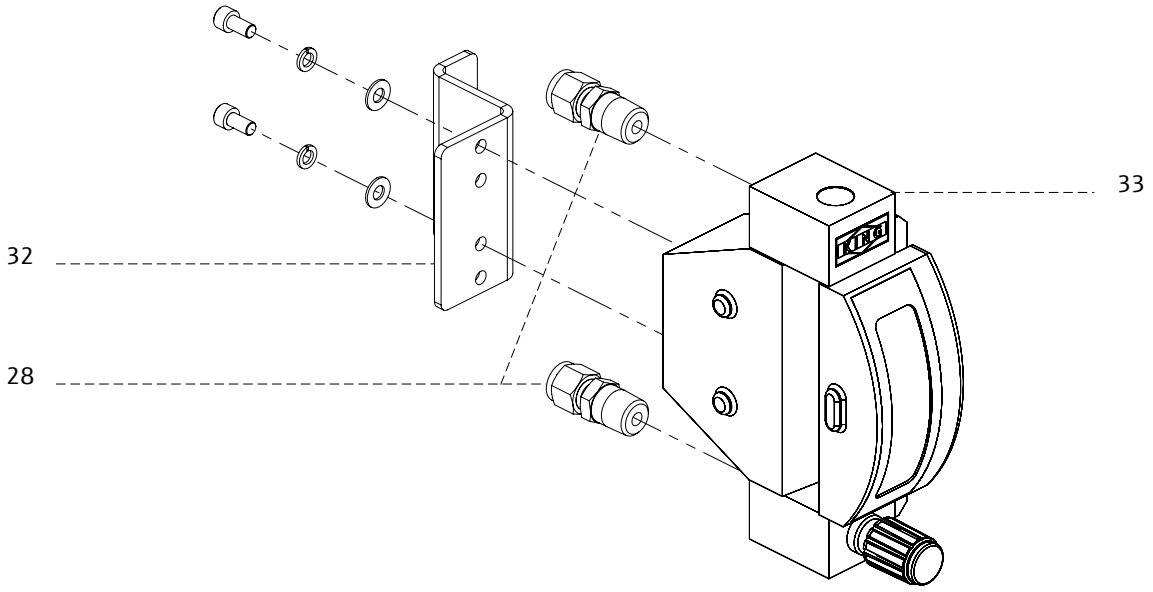

Endress+Hauser
People for Process Automation

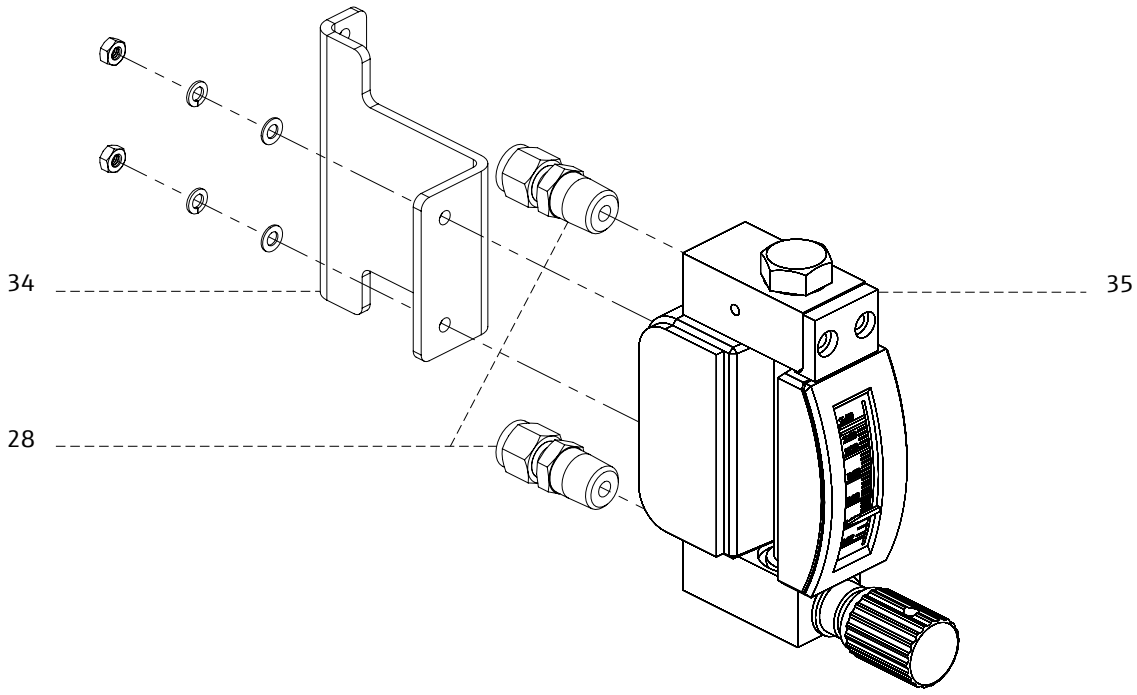

Endress+Hauser
People for Process Automation

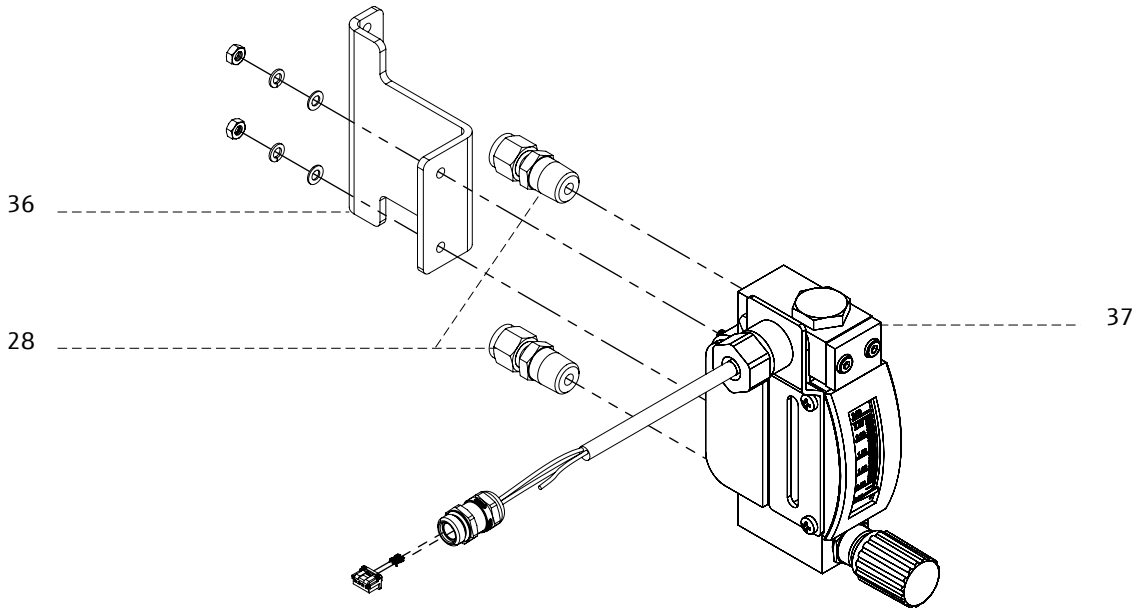

Endress+Hauser
People for Process Automation

38

