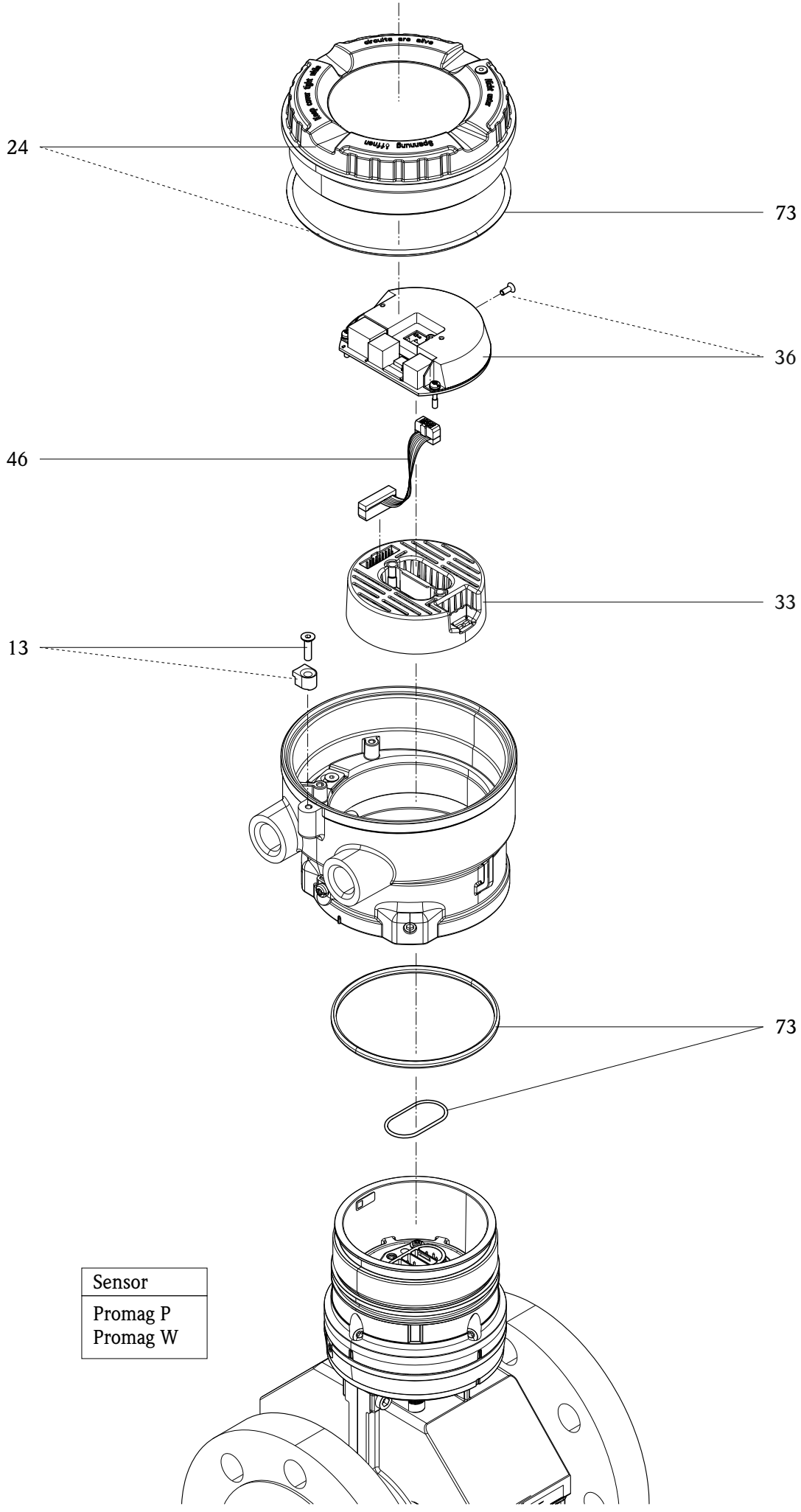
24
73
36
46
33
13
73
Sensor
Promag P
Promag W