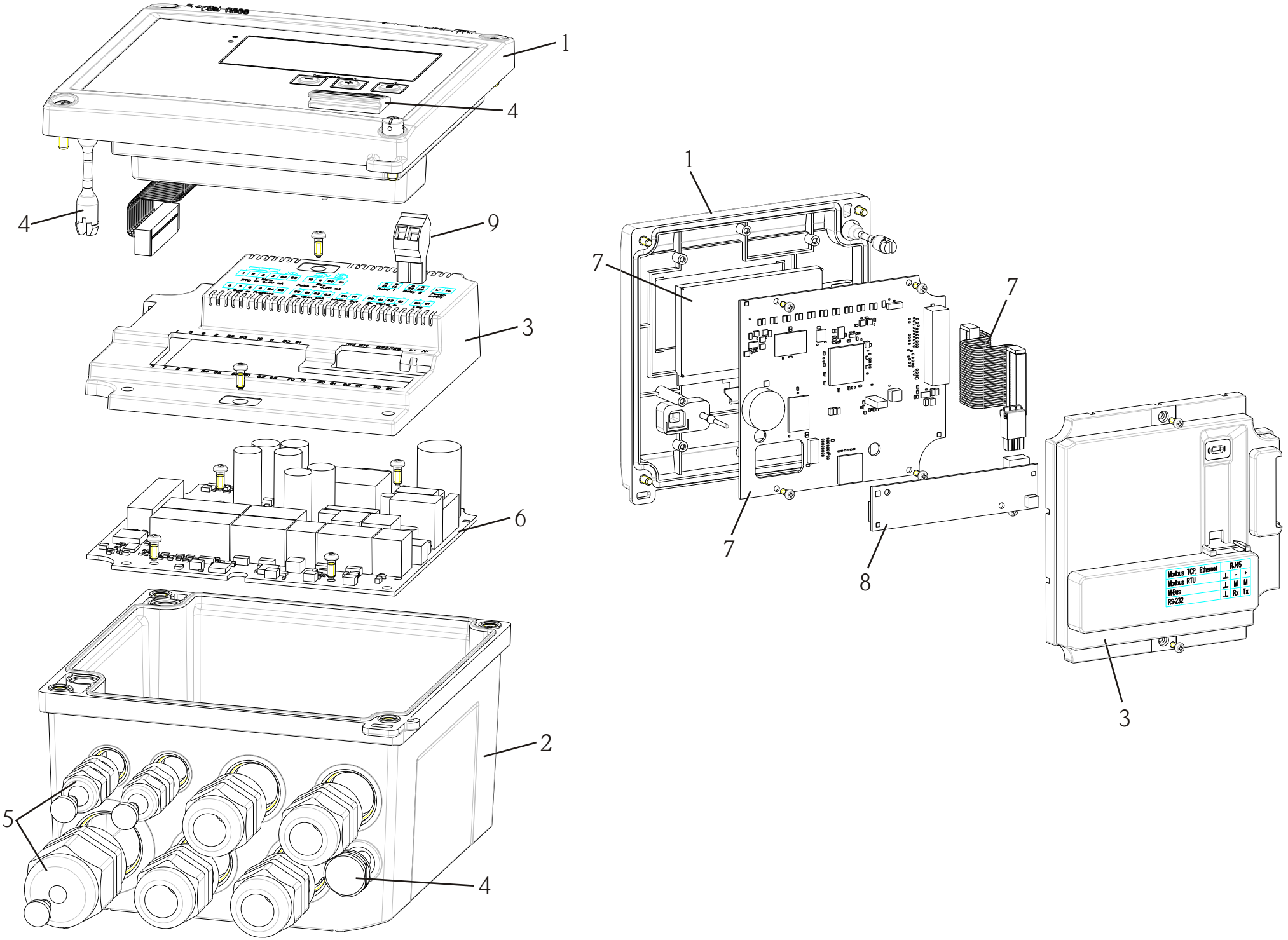
1
4
4
9
3
6
2
5
4
1
7
7
7
8
3
Modbus TCP, Ethernet
Modbus RTU
M-Bus
RS-232
RJ45
⊥ - +
⊥ M M
⊥ Rx Tx