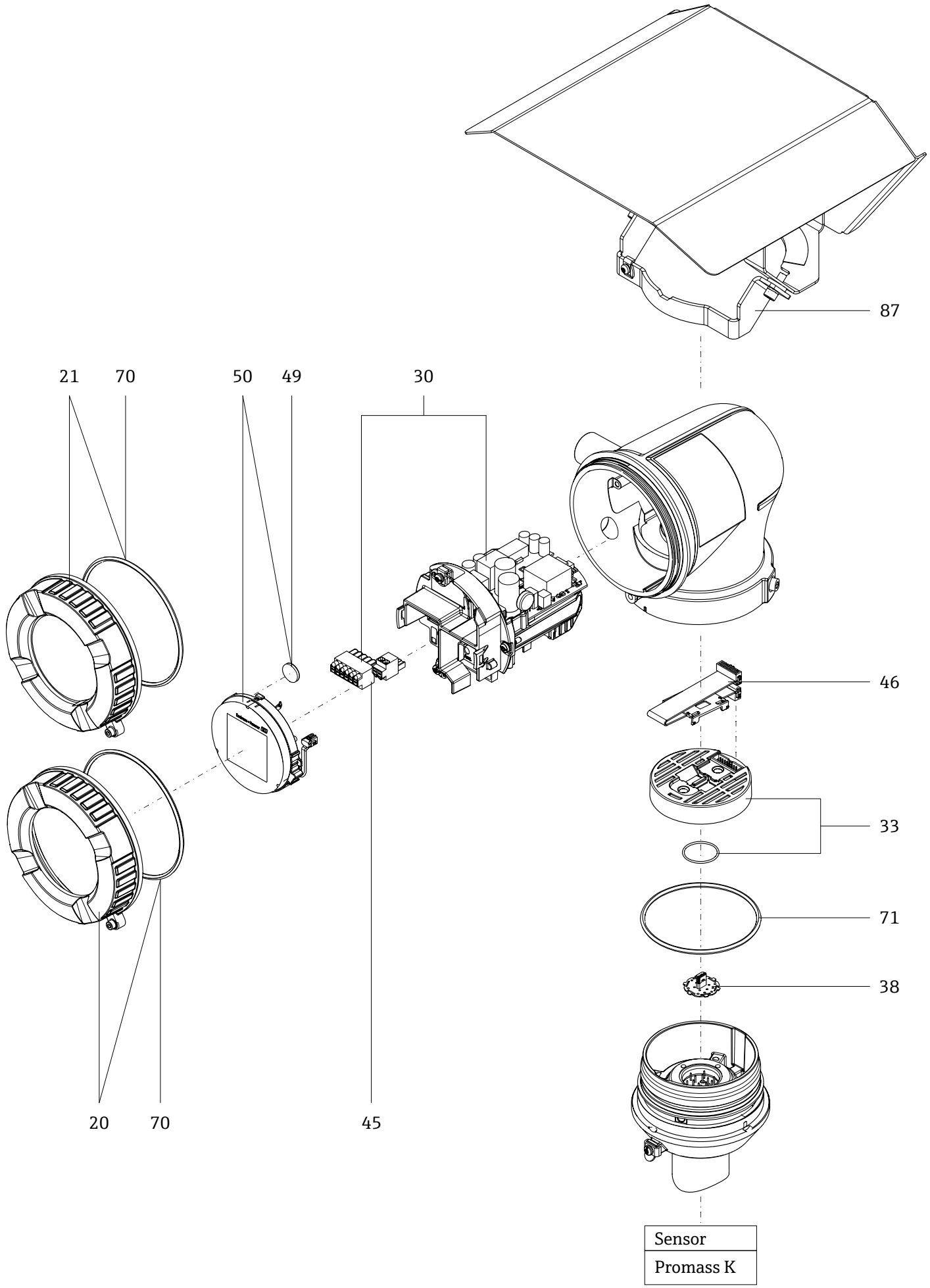

Sensor
Promass K